Specification Sheet

==========

Picture:

Name: ------- **Whistle** Horizontal Wall Lamp

Code: ------- 1620

Finish: ------- Polished

Main Material: --- Stainless steel + Aluminium

Shade Material: -- Aluminium

Product size:

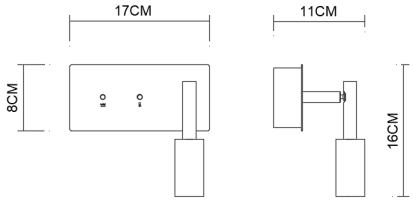

==========

Lamp Source: LED

Input Voltage: 220~240 V

Switch: Micro Switch

Plug: Na

Wattage: 1x3W+1x2.2W

Lumen: 226.4 lm

Energy Efficiency Class: A

==========

Specification: IP20

==========

Inner Box:

210*120*150(mm) 1pc

Outer Carton:

270*230*330(mm) 4pcs

Gross Weight: KGS

Net Weight: KGS

==========

Cable Length / Terminal Block:

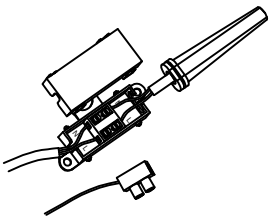
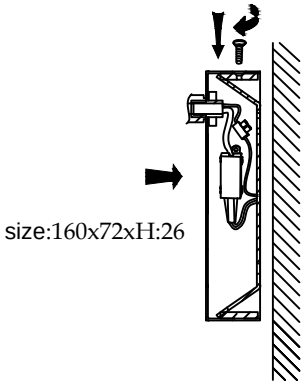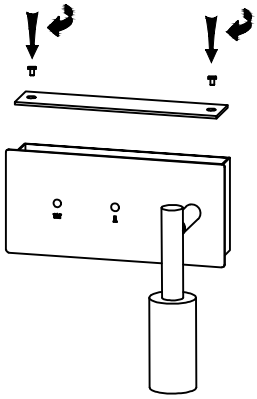
Installation Instruction: